CNP 南方泵业
CHINA NANFANG PUMP

DQ

2006版

50Hz

气压式恒压给水设备

Constant Pressure Water-Supplying System(Pressure-Controling Style)

杭州南方特种泵业有限公司（杭州南方特种泵厂）
Hangzhou Nanfang Special Pump Industry Co.,Ltd.（Hangzhou Nanfang Special Pump Factory）

杭州南方特种泵业有限公司是集科研、生产、销售于一体的不锈钢多级泵专业生产厂家。公司创建十几年来，始终致力于科技和管理的创新，开发出适用于工矿企业、城市供水、农田排灌、石油化工、高层建筑供水、消防、工业水处理和纯净水、制药行业、锅炉、空调供暖等各行业的用泵。公司的主导产品CDL系列不锈钢多级立式泵、TD系列管道循环泵、SJ系列不锈钢多级深井潜水电泵、CDLK，CDLKF浸入式多级离心泵、CHL/CHLK/CHLF系列不锈钢多级卧式泵、QY系列不锈钢气液混合泵、DQ系　气压式恒压给水设备等的主要性能指标已完全达到国际先进水平。

公司采用三维CAD设计软件、CFD计算流体力学软件等先进的设计手段进行产品开发，拥有大批精良的制造和检测设备，建立了完备的质量管理体系，2000年通过了ISO9002认证，2003年通过ISO9001：2000换版认证，2002年通过CE认证。产品畅销全国各地，并远销欧美及东南亚等海外地区。优质的产品、良好的信誉和周到的服务，深受广大用户的青睐。

公司在全国建立了广泛销售、服务网络，在北京、上海、深圳、济南、成都、武汉、郑州、广州、宜兴、张家港等地设有办事处及服务中心，为客户提供及时而满意的服务。

展望未来，公司将继续保持和发扬企业的优良传统，本着“质量第一、信誉第一、客户第一”的经营方针，以“客户满意”为目标，为广大客户提供更好的产品和更贴心的服务。

“南方泵业”——一个值得信赖的民族品牌！

Hangzhou Nanfang Special Pump Industry Co., Ltd. is specialized in manufacture of stainless steel multistage pumps, integrating scientific research, production and marketing. Since its establishment ten-odd years ago, the company has devoted considerable efforts to make innovation of technology and management, and have successfully developed various kinds of pumps which are applicable to industrial and mining enterprises, municipal water supply, farm irrigation, petrochemical engineering, domestic water and fire water supply of high buildings, industrial water treatment, water purification, pharmaceutical industry, boiler, air-conditioning system etc. The main performances of CDL series stainless multistage vertical pump, TD in-line circulation pump, SJ series stainless steel multistage deep-well submersible pump, CDLK, CDLKF immersion type multi-stage centrifugal pump, CHL / CHLK / CHLF series stainless multistage horizontal pumps, QY series stainless steel pump conveying mixed gas and liquid, DQ series constant pressure water-supplying system(pressure-controling style), have fully reached the international advanced level.

Besides advanced means used in design such as three-dimensional CAD and CFD software, the company boasts a complete set of precision manufacturing and inspection equipment. With perfect quality assurance system, the company passed ISO9002 authentication, CE certification and ISO9001:2000 new edition authentication in 2000, 2002 and 2003 respectively. the products of the company sell well not only at home, but also in foreign countries in Europe, America, Southeastern Asia etc, gaining popularity due to their excellent quality, and good credit standing and considerate after-sales service of the company.

The company has established a wide sales and service network which has representative offices and service centers in Beijing, Shanghai, Shenzhen, Jinan, Chengdu, Wuhan, Zhengzhou, Guangzhou, Yixing, Zhangjiagang and so on, aiming to providing timely and satisfactory service for customers.

Satisfying customers will be eternal pursuit of the company. Looking for ward to the future, the company will further keep up its fine tradition and persist in its business principle of "quality first, credit first and clients first" to offer customers products of high quality and more considerate services.

Nanfang Pump Industry a national brand worthy of your trust!

高新技术企业认定证书
Confirmation certificate of hi-tech enterprise

卫生许可证
Hygiene authentication certificate

ISO9001认证
authentication certificate

CE认证证书
CE authentication certificate

浙江省诚信示范企业
Integrity demo enterprise of zhejiang province

企业资信等级：AAA级
Enterprise credit standing grade: AAA grade

浙江省技术创新优秀企业
Excellent technical innvoation enterprise of zhejiang province

总体数据

型号含义 — — — — — — — — — - 3
优　　点 — — — — — — — — — - 3
使用范围 — — — — — — — — — - 3
特殊功能 — — — — — — — — — - 3
性能曲线 — — — — — — — — — - 4
安装尺寸图 — — — — — — — — — 5
型号及规格 — — — — — — — — — 6

General Data

Connotation of the type — — — — — — 3
— — — — — — — — — — 3
Range of use — — — — — — — — - 3
Special function — — — — — — — — 3
Performance curve — — — — — — — 4
Installation sketch — — — — — — — 5
Model and Specification — — — — — - 6

型号含义

1 DQ – CHLF 4 – 40

- 40：水泵级数 × 10
- 4：额定流量(m^3/h)
- CHLF：水泵型号
- DQ：气压式恒压供水设备
- 1：水泵台数

Connotation of the type

1 DQ – CHLF 4 – 40

- 40：Number of pump stages × 10
- 4：Rated flow rate (m^3/h)
- CHLF：Model
- DQ：Constant pressure water-supplying system
- 1：Number of pump

使用范围

●一般家庭，小高层，高级别墅，宾馆等需要恒压供水或其它需要加压的场所，机床及工业用水。
●住宅小区房屋顶部二层加压和其他水压不够需要加压的场所。

特殊功能

●操作时只须设定压力范围
●低水位保护功能
●具有报警功能，出现故障时可以采取应急措施。

优点

●选泵简单
●运转方法简便
●噪音低、振动小
●节约能源
●具有防止水泵空转功能
●具有完善的防水锤功能
●维持恒压功能
●电流过载保护功能
●节约安装空间
●过流部件使用不锈钢材质
●出色的内部结构及很高的产品可信度
●高品质的设计使外观更加美观

Range of use

●Ordinary family, small high-rise, advanced villa, hotel requiring the water supply by constant pressure or other places requiring pressurization, water for machine tool and the industry.
●Pressurization for the second floor on the top of the house in the residential district and other places where the water pressure is not enough, requiring pressurization.

Special function

●When operating, only set range of pressure
●Protection of low water level
●Alarm function. In case of arising of trouble, emergency measures may be taken.

Virtues

●Simple options for pump
●Easy operation
●Low noise and small vibration
●Energy saving
●Able to prevent the water pump from empty running
●Perfect waterproof hammer
●Maintain constant pressure
●Overcurrent protection
●Saving installation space
●The component to pass the current uses stainless steel.
●Excellent internal structure and higher product reliability
●High quality design contributes to more beautiful appearance.

性能曲线 / Performance curve

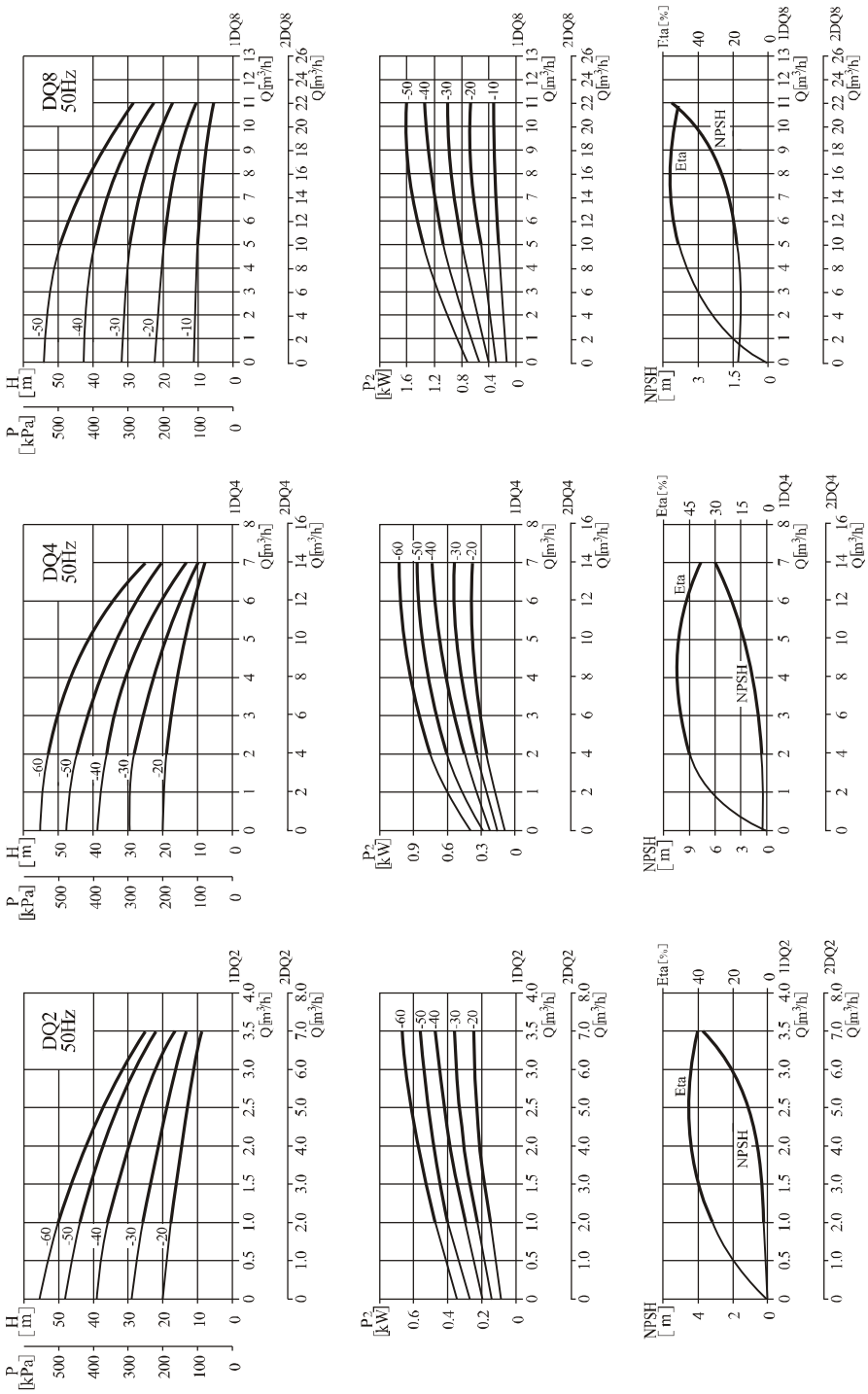

安装尺寸图 /Installation sketch

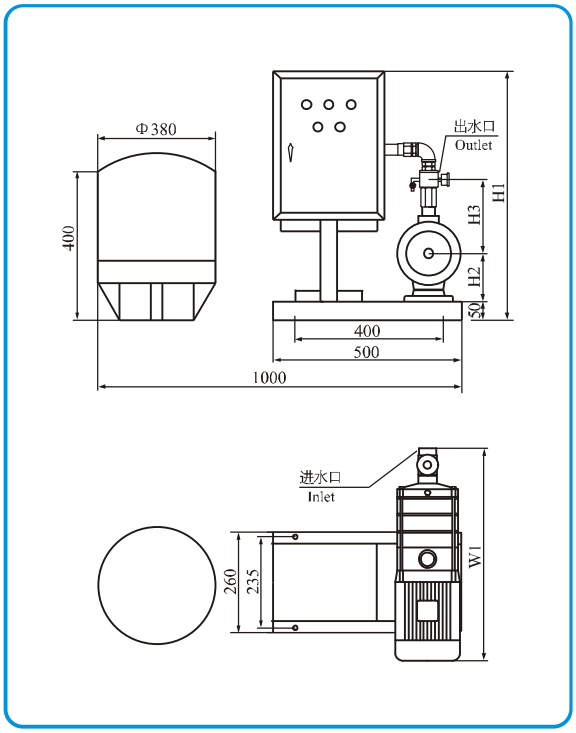

型 号/Model	功率/Power (kW)	口径/Inlet&Outlet(mm) 进口	口径/Inlet&Outlet(mm) 出口	尺寸/Size(mm) W1	H1	H2	H3	重量/Weight (kg)
1DQ-CHLF2-20	0.37	G1"	G1"	305	660	110	220	30
1DQ-CHLF2-30	0.55	G1"	G1"	323	660	110	220	30
1DQ-CHLF2-40	0.55	G1"	G1"	341	660	110	220	30
1DQ-CHLF2-50	0.55	G1"	G1"	359	660	110	220	30
1DQ-CHLF2-60	0.75	G1"	G1"	422	660	110	220	34
1DQ-CHLF4-20	0.55	G1$\frac{1}{4}$"	G1"	323	660	110	220	30
1DQ-CHLF4-30	0.55	G1$\frac{1}{4}$"	G1"	395	660	110	220	34
1DQ-CHLF4-40	0.75	G1$\frac{1}{4}$"	G1"	422	660	110	220	34
1DQ-CHLF4-50	1.1	G1$\frac{1}{4}$"	G1"	469	660	110	220	40
1DQ-CHLF4-60	1.1	G1$\frac{1}{4}$"	G1"	496	660	110	220	40
1DQ-CHLF8-10	0.75	G1$\frac{1}{2}$"	G1$\frac{1}{4}$"	395	700	118	230	40
1DQ-CHLF8-20	0.75	G1$\frac{1}{2}$"	G1$\frac{1}{4}$"	395	700	118	230	40
1DQ-CHLF8-30	1.1	G1$\frac{1}{2}$"	G1$\frac{1}{4}$"	425	700	118	230	50
1DQ-CHLF8-40	1.5	G1$\frac{1}{2}$"	G1$\frac{1}{4}$"	490	710	118	230	56
1DQ-CHLF8-50	2.2	G1$\frac{1}{2}$"	G1$\frac{1}{4}$"	520	710	118	230	60

安装尺寸图 /Installation sketch

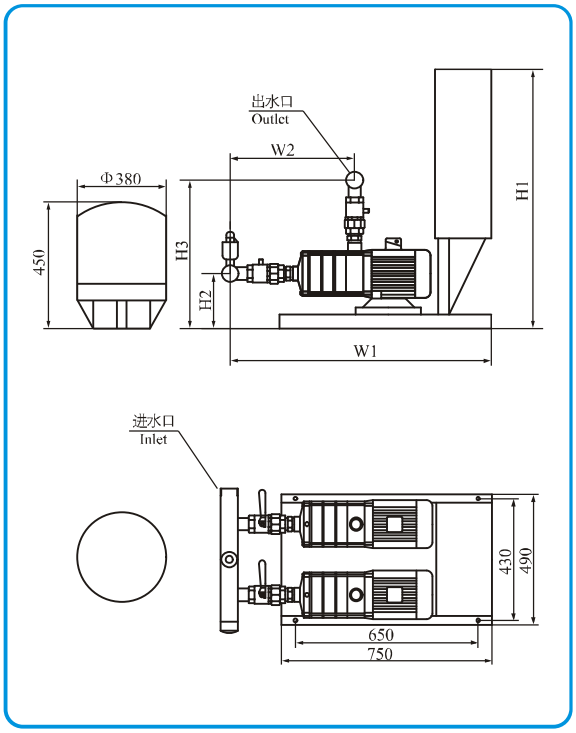

型 号/Model	功率/Power (kW)	口径/Inlet&Outlet(mm) 进口	出口	尺寸/Size(mm) W1	W2	H1	H2	H3	重量/Weight (kg)
2DQ-CHLF2-20	0.37	G2"	G2"	835	385	800	110	310	60
2DQ-CHLF2-30	0.55	G2"	G2"	850	400	800	110	310	60
2DQ-CHLF2-40	0.55	G2"	G2"	870	420	800	110	310	60
2DQ-CHLF2-50	0.55	G2"	G2"	890	440	800	110	310	60
2DQ-CHLF2-60	0.75	G2"	G2"	950	500	800	110	310	68
2DQ-CHLF4-20	0.55	G2"	G2"	895	445	800	110	320	60
2DQ-CHLF4-30	0.55	G2"	G2"	930	480	800	110	320	68
2DQ-CHLF4-40	0.75	G2"	G2"	960	510	800	110	320	68
2DQ-CHLF4-50	1.1	G2"	G2"	990	540	800	110	320	80
2DQ-CHLF4-60	1.1	G2"	G2"	1020	570	800	110	320	80
2DQ-CHLF8-10	0.75	G2"	G2"	930	480	845	118	350	80
2DQ-CHLF8-20	0.75	G2"	G2"	930	480	845	118	350	80
2DQ-CHLF8-30	1.1	G2"	G2"	960	510	845	118	350	100
2DQ-CHLF8-40	1.5	G2"	G2"	990	540	845	118	350	112
2DQ-CHLF8-50	2.2	G2"	G2"	1020	570	845	118	350	120

CNP 南方泵业
CHINA NANFANG PUMP

杭州南方特种泵业有限公司
Hangzhou Nanfang Special Pump Industry Co.,Ltd.

营销中心:杭州下城区中河北路69号意盛商务大厦七楼
Marketing center:F7,Yisheng Business Manson,
69 Zhonghe (N) Rd. Xiacheng, Hangzhou
电话(Tel): 0571-85804640 85804642
传真(Fax): 0571-85804641
邮编(P.C): 310014
E-mail:Sales@nanfang-pump.com
Http://www.nanfang-pump.com

公司地址：浙江杭州余杭区仁和镇洪家舍26号
Add:26,Hongjiashe, Renhe Town,
Yuhang District, Hangzhou, Zhejiang
技术服务电话（Tel）：0571-86396571
售后服务电话（Tel）：0571-86308303 86396576
邮编(P.C): 311107

驻外办事处： Representative office
北京办：010-58202380
上海办：021-64082242
济南办：0531-88600183
南京办：025-85282151
成都办：028-87659879
武汉办：13871356379
广州办：020-26097099
杭州办：0571-85804596
沈阳办：024-82607151
安徽办：0561-3047222
宜兴办：0510-7891076
长沙办：0731-4724012
陕西办：029-87330277
深圳办：0755-82426766
厦门办：0592-2111131
郑州办：0371-66226511
天津办：022-86353059
昆明办：0871-3329530
张家港办：0512-58238639
哈尔滨办：0451-89738280

060101

数据仅供参考：如有修改，恕不通知。
The technical data are subject to amend without notice.